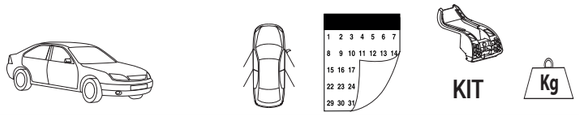

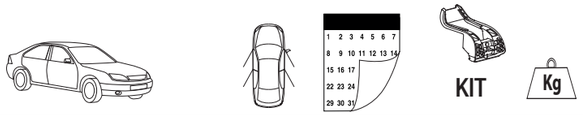

Mont Blanc®

MB RoofBars ACTIVA

Alu AERO 1250

JAHRE GARANTIE 5 YEARS GUARANTEE

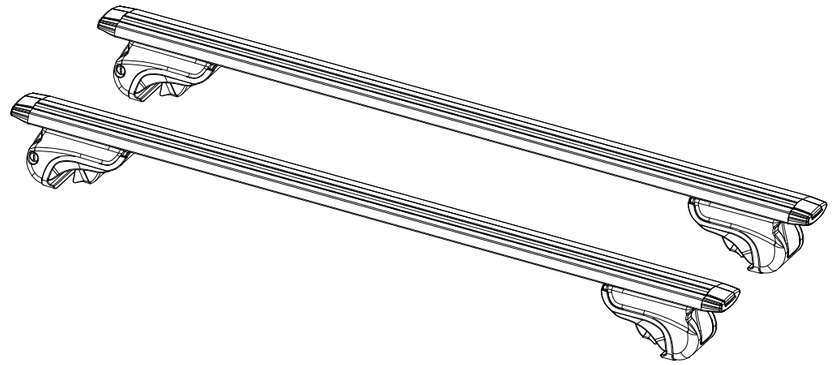

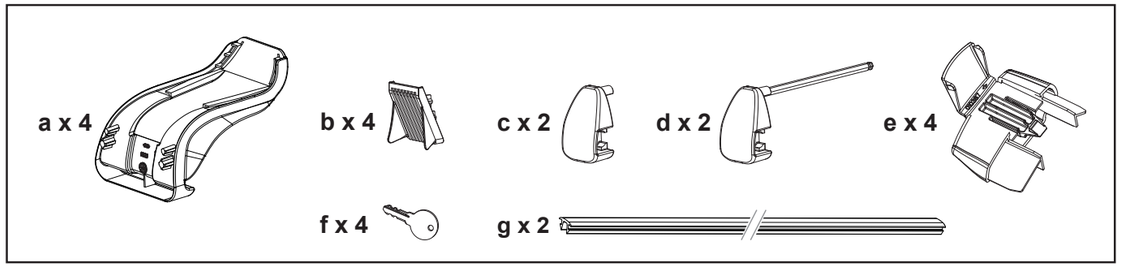

Pour en savoir plus :
www.quefairedemesdechets.fr

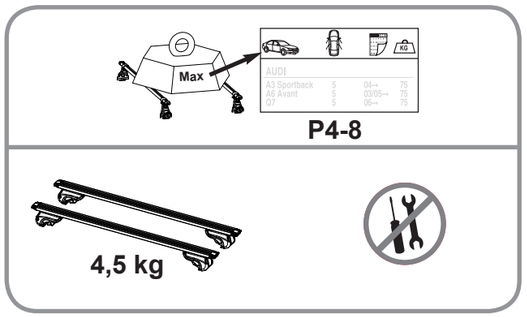

EN Keep these instructions for future use.
FR Garder cette notice pour les utilisations futures.
ES Guardar este manual para futuras utilizaciones.
DE Die Anleitung zur späteren Benutzung aufbewahren.
IT Conservare queste istruzioni per ogni ulteriore consultazione.
NL Bewaar deze gebruiksaanwijzing voor toekomstige raadpleging.
PT Guardar este manual para as utilizações futuras.
PL Zachować instrukcję w przypadku użytkowania w przyszłości.
HU Őrizze meg ezt a használati utasítást későbbi felhasználás céljából.
RU Сохраните эту инструкцию для дальнейшего пользования.
RO Păstraţi instrucţiunile pentru consultarea lor ulterioară.
SK Tento návod si uchovajte pre ďalšie použitie.
CS Uschovejte návod pro pozdější použití.
SV Behåll denna information för framtida bruk
BG Запазете настоящата бележка за бъдещи справки
TR Bu bilgileri ileride kullanmak üzere saklayın
UK Збережіть цю інструкцію для подальшого використання
EL Φυλάξτε αυτό το εγχειρίδιο οδηγιών για μελλοντικές χρήσεις.
DA Gem denne vejledning til senere brug.

Mont Blanc France
24-30 Rue Claude Bernard - C.S. 61768
35417 Saint Malo Cédex - France
Office : +33 (0)2 99 21 12 70
Fax : +33 (0)2 99 21 12 71
www.montblancgroup.com

Réf.Imp.: 058249 / B23-1

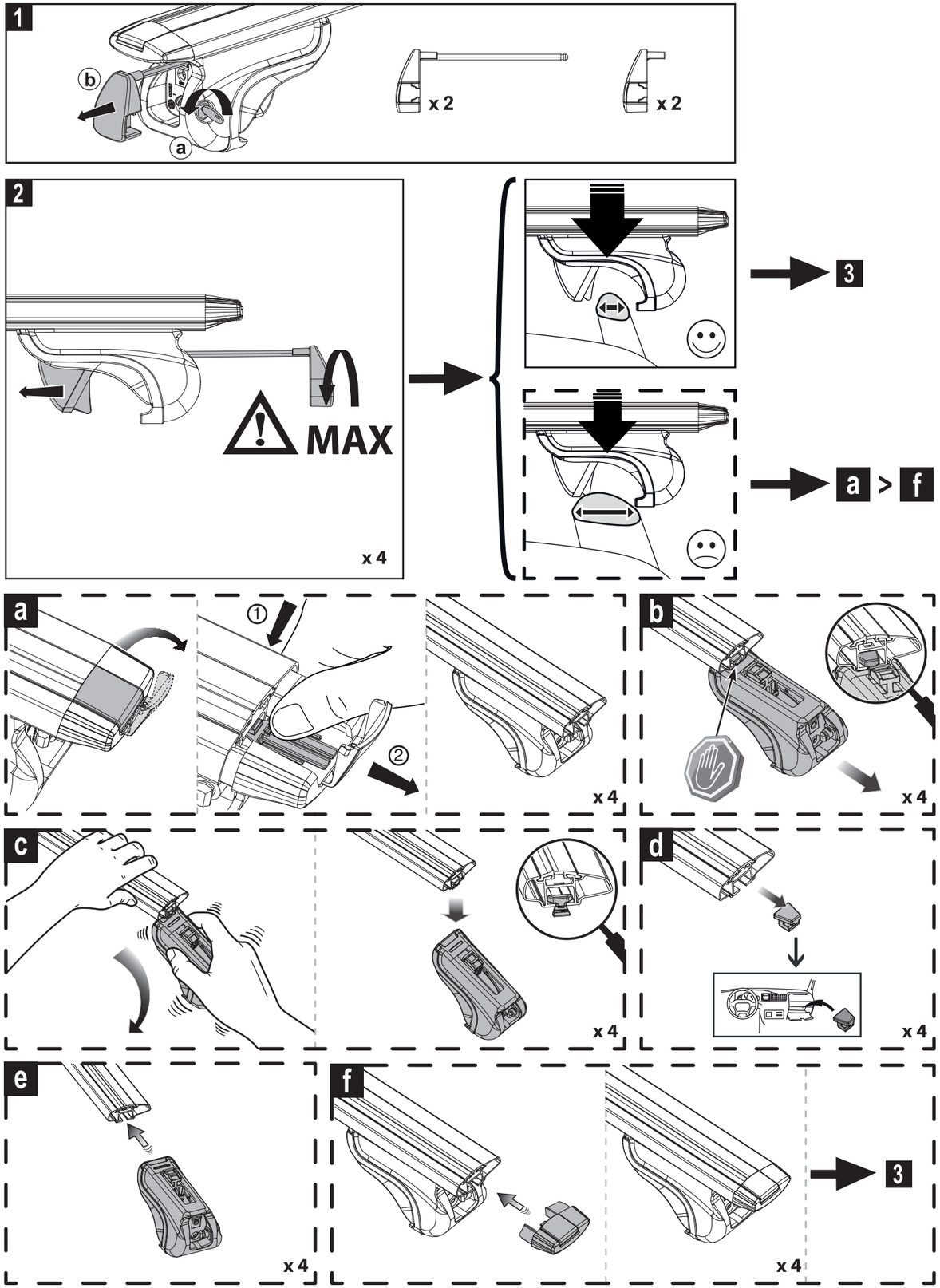

			KIT	Kg
KODIAQ (3)	5	17 ->	06+	75
OCTAVIA II Combi / Break (3)	5	10/04 -> 07/13		75
OCTAVIA III Combi / Break (3)	5	08/13 -> 06/20		75
OCTAVIA IV Combi / Break (3)	5	07/20 ->	06+	75
OCTAVIA SCOUT (3)	5	04/07 ->		75
SUPERB COMBI II (3)	5	10 -> 08/15		100
SUPERB COMBI III (3)	5	09/15 ->		75
YETI (3)	5	09 ->		75
SSANGYONG				
KORANDO (3)	5	11 ->		75
KYRON (3)	5	06 ->		45
MUSSO (3)	5	93 ->		55
REXTON (3)	5	02 ->		100
RHODIUS (3)	5	04 ->		70
SUBARU				
FORESTER (3)	5	13 -> 18		75
XV (3)	5	18 ->		75
SUZUKI				
GRAND VITARA / ESCUDO (3)	3	98 -> 09/05		45
GRAND VITARA / ESCUDO (3)	5	98 -> 09/05		45
IGNIS (3)	5	03 -> 08		35
IGNIS (3)	5	16 ->		75
JIMNY (3)	3	98 -> 09/18		75
SWACE	5	21 ->	06+	75
SX4 (3)	5	06 -> 08/13		60
SX4 S-CROSS (3)	5	09/13 -> 21	05+	75
VITARA II (3)	5	15 ->	05+	75
WAGON R / R Wide / R+ (3)	5	96 -> 99		50
WAGON R+ (3)	5	00 ->		50
S-CROSS (3)	5	22 ->	05+	75
TOYOTA				
COROLLA TOURING SPORTS (3)	5	19 ->	06+	75
COROLLA VERSO (3)	5	04 ->		75
COROLLA VERSO / SPACIO (3)	5	01 -> 03		75
LAND CRUISER (3)	3	03 ->		100
LAND CRUISER (3)	5	03 ->		100
LAND CRUISER 150 (3)	5	12/09 ->		75
LAND CRUISER J9 - PRADO (3)	5	97 -> 02		100
PICNIC / IPSUM (3)	5	96 ->		100
RAV-4 (3)	3	01 -> 01/06		100
RAV-4 (3)	5	01 -> 01/06		100
RAV-4 (3)	5	03/13 -> 18		75
VOLKSWAGEN				
CADDY (3)	5	11 ->		75
GOLF V SW / Variant (3)	5	05/07 ->		75
GOLF VI SW / Variant (3)	5	10/09 ->		75
ID4 (3)	5	21 ->	06+	75
PASSAT ALLTRACK (3)	5	09/15 ->	03+	75
PASSAT SW (B8) (3)	5	11/14 ->	03+	75
POLO Cross (3)	5	05/10 ->		75
SHARAN (3)	5	95 -> 08/10		75
T-CROSS (3)	5	19 ->	06+	75
TIGUAN (3)	5	11/07 -> 03/16		75
TIGUAN ALLSPACE (3)	5	17 ->		75

			KIT	Kg
TIGUAN II (3)	5	04/16 ->		75
TOUAREG (3)	5	02 -> 05/10		50
TOURAN (3)	5	03 -> 08/10		100
TOURAN II (3)	5	09/10 -> 08/15		100
TOURAN III (3)	5	09/15 ->		75
T-ROC (3)	5	17 ->		75
VOLVO				
850 Break / Wag (3)	5	93 -> 96		75
V40 CC (3)	5	13 ->		75
V50 (3)	5	04 ->		75
V60 (3)	5	09/18 ->	06+	75
V60 (3)	5	10/10 -> 08/18	06+	75
V60 CROSS COUNTRY (3)	5	15 -> 18	06+	75
V60 CROSS COUNTRY (3)	5	19 ->	06+	75
V70 (3)	5	00 -> 07/07		100
V70 (3)	5	08/07 ->		100
V70 (3)	5	97 -> 99		75
V90 (3)	5	10/16 ->	06+	75
V90 CROSS COUNTRY (3)	5	17 ->	06+	75
XC40 (3)	5	03/18 ->	06+	75
XC60 (3)	5	09/08 -> 06/17	06+	75
XC60 II (3)	5	07/17 ->	06+	75
XC70 (3)	5	03 -> 07/07		100
XC70 (3)	5	08/07 ->		100
XC90 (3)	5	03 -> 05/15		100
XC90 II (3)	5	06/15 ->	06+	75

			KIT	Kg
MINI				
COUNTRYMAN (R60) (3)	5	10 -> 09/16	05+	75
COUNTRYMAN II (F60) (3)	5	10/16 ->		75
PACEMAN (3)	3	13 ->	06+	75
MITSUBISHI				
ASX (3)	5	10 ->	04+	70
GRANDIS (3)	5	03 ->		75
OUTLANDER (3)	5	02/07 -> 08/12		100
OUTLANDER / AIRTREK (3)	5	03 -> 01/07		75
PAJERO (3)	3	02/07 ->		100
PAJERO (3)	5	02/07 ->		100
PAJERO (3)	5	99 -> 01/07		80
PAJERO PININ (3)	5	00 ->		80
PAJERO PININ (3)	3	99 ->		80
PAJERO SPORT (3)	5	00 ->		75
SPACE WAGON (3)	5	99 ->		80
NISSAN				
MURANO (3)	5	03 ->		60
NP 300 NAVARA (3)	5	16 ->		75
PATHFINDER (R51) (3)	5	05 -> 13	07+	75
QASHQAI (3)	5	06/07 -> 01/14		75
QASHQAI +2 (3)	5	10/08 ->		75
QASHQAI III (3)	5	21 ->	05+	75
TERRANO II (3)	3	93 ->		75
TERRANO II (3)	5	93 ->		75
X-TRAIL (3)	5	07/14 ->		75
OPEL				
AGILA (3)	5	00 -> 03/08		75
ANTARA (3)	5	07 ->		100
ASTRA Break (H) (3)	5	09/04 -> 01/07	01+	75
ASTRA Break (H) (3)	5	02/07 -> 10	02+	75
ASTRA SPORT TOURER (J) (3)	5	11 -> 15	02+	60
CROSSLAND (3)	5	21 ->	06+	75
CROSSLAND-X (3)	5	17 ->	06+	75
FRONTERA (3)	5	99 ->		100
FRONTERA (3)	3	99 ->		100
FRONTERA (3)	3	91 -> 98		100
GRANDLAND-X (3)	5	17 ->	06+	75
INSIGNIA COUNTRY TOURER (3)	5	04/17 ->	06+	75
INSIGNIA II SPORTS TOURER (3)	5	04/17 ->	06+	75
INSIGNIA SPORTS TOURER (3)	5	09 -> 03/17	03+	50
MOKKA (3)	5	12 ->	05+	75
MOKKA X (3)	5	16 ->	05+	75
SIGNUM (3)	5	03 ->	01+	75
SINTRA (3)	5	96 ->		75
VECTRA Caravan / Break (3)	5	09/03 ->	01+	75
ZAFIRA (3)	5	09/05 -> 01/07	01+	75
ZAFIRA (3)	5	02/07 ->	02+	75
ZAFIRA TOURER (3)	5	11/11 ->	02+	60
PEUGEOT				
1007 (3)	3	05 ->		100
2008 (3)	5	13 -> 19		100
2008 II (3)	5	20 ->	06+	75
207 SW (3)	5	07/07 ->		75
3008 II (3)	5	10/16 ->	06+	75
307 SW / Break (3)	5	02 ->		80
308 SW (3)	5	05/08 -> 04/14		80
4007 (3)	5	07/07 ->		100
4008 (3)	5	12 ->	04+	70
407 SW (3)	5	04 ->		100
5008 II (3)	5	03/17 ->	06+	75
508 SW (3)	5	11 -> 04/19	06+	75
508 SW II (3)	5	05/19 ->	06+	75
PARTNER QUICKSILVER (3)	5	06 -> 03/08		75
PARTNER TEPEE FAMILY (3)	5	05/08 -> 08/18		80
PARTNER TEPEE ZENITH (3)	5	05/08 -> 08/18		80
PONTIAC				
VIBE (3)	5	01 ->		75
PORSCHE				
MACAN (3)	5	14 ->	06+	75
RENAULT				
ALASKAN (3)	4	17 ->		75
AUSTRAL (3)	5	22 ->	06+	75
CAPTUR II (3)	5	12/19 ->	06+	75
CLIO III ESTATE (3)	5	08 ->		80
CLIO IV ESTATE (3)	5	03/13 ->		75
ESPACE VI (3)	5	23 ->	06+	75
GRAND SCENIC (3)	5	11/16 ->	06+	75
GRAND SCENIC (3)	5	04/09 -> 10/16		75
KADJAR (3)	5	15 ->	05+	75
KOLEOS (3)	5	06/08 -> 05/17		80
KOLEOS II (3)	5	06/17 ->	06+	75
LAGUNA III Estate / Break (3)	5	08 ->		80
LAGUNA Nevada / Break (3)	5	95 -> 00		80
MEGANE II Estate / Break (3)	5	10/03 ->		80
MEGANE III Estate / Break (3)	5	06/09 ->08/16		80
MEGANE IV Estate / Break (3)	5	09/16 ->	06+	75
SCENIC CONQUEST (3)	5	06/07 ->		75
SCENIC III (3)	5	06/09 -> 08/16		75
SCENIX XMOD (3)	5	13 ->		75
TALISMAN ESTATE (3)	5	16 ->	06+	75
SAAB				
9-3 Estate / Sport Hatch (3)	5	03/05 ->		75
9-3X (3)	5	09 ->		75
9-5 Estate (3)	5	99 ->		100
SEAT				
ALHAMBRA (3)	5	96 -> 08/10		75
ALTEA FREETRACK (3)	5	09/07 ->	02+	75
ALTEA XL (3)	5	06 ->	02+	75
ATECA (3)	5	16 ->		75
EXEO ST (3)	5	09 ->		75
IBIZA ST (3)	5	10 ->	02+	60
LEON ST (3)	5	14 -> 02/20	06+	75
LEON ST (3)	5	20 ->	06+	75
TARRACO (3)	5	19 ->		75
SKODA				
ENYAQ iV (3)	5	21 ->	06+	75
FABIA Combi/Break (MKII) (3)	5	08 -> 14		75
FABIA Combi/Break (MKIII) (3)	5	01/15 ->		75
KAMIQ (3)	5	19 ->		75
KAROQ (3)	5	17 ->		75

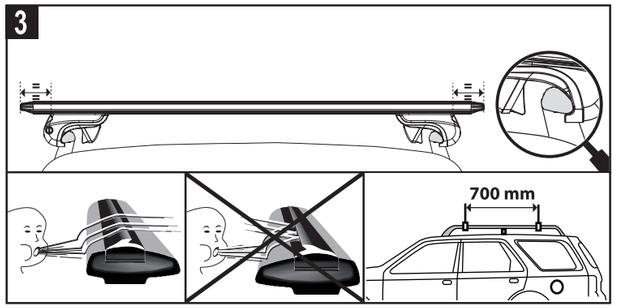

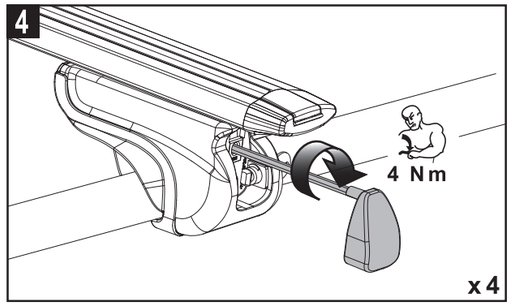

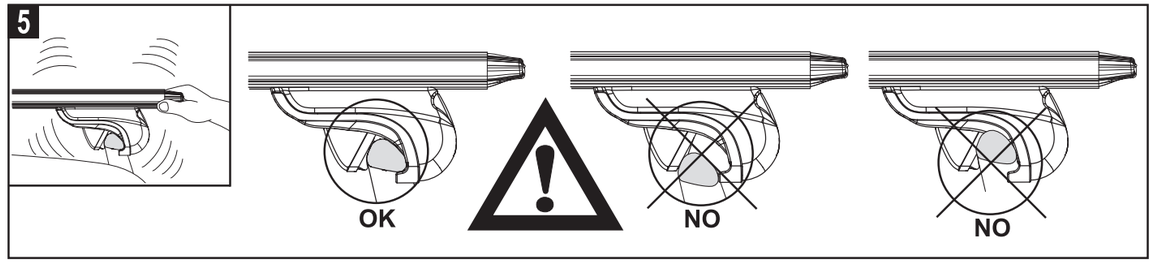

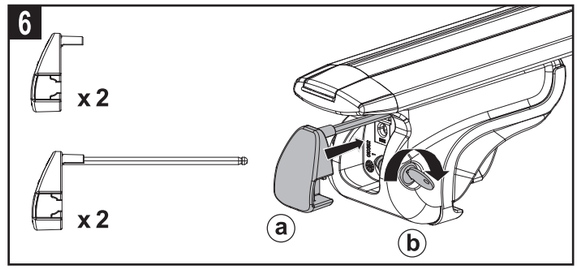

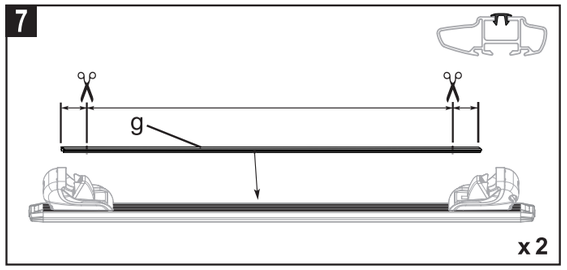

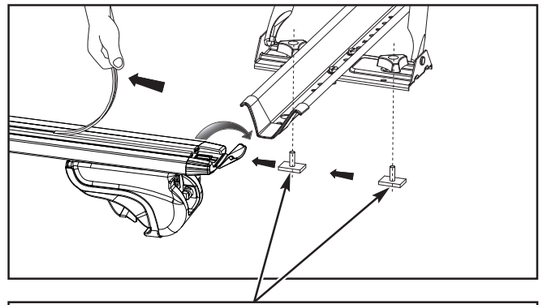

• Option : Kit fixation rainure en T (Barre Silverline) • Option: T-slot attachment kit (Bar Silverline) • Option : T-Schlitz-Befestigungsein-heit (Stange Silverline) • Opzione: Kit di fissaggio scanalatura a T (Barra Silverline) • Opción : Kit de fijación de ranura en T (Barra Silverline) • Wybór: Komplet mocowań z teowego krztałtowniku (płaskowniku Silverline) • Optie : Bevestigingskit T-groef (staaf Silverline) • Opção : Kit de fixação ranhura em T (Barra Silverline) • Opció : T-hornyos rögzítő készlet (Rúd Silverline) • Дополнительно : Набор для фиксации Балки в паз Т (образной формы Siverline) • Επλοή : Κιτ σταθεροποίησης εσοχής σε σχήμα Τα (Μπάρα Silverline) • Mulighed : T-slot forbindelseskit (Bar Silverline) • Volitelné příslušenství: sada k upevnění do drážky tvaru T (tyč Silverline) • Optiunea : Kit cu canal de prindere în T (Bară Silverline) • Papildoma įranga : T formos plyšio padargų komplektas (Bar Silverline) • Iespēja: T-veida stiprinājumu komplekts (Bar Silverline) • Valik : T-soone tarvikute komplekt (Bar Silverline) • Možnosť : súprava na pripevnenie T-drážky (strieborná lišta) • Opcija : T-slot pričvrstitveni komplet (Bar Silverline) • Opcija : T-utor dodatak za opremu (Posrebrena šipka) • Opcija : T-žleb dodatak za opremu (Posrebrena šipka).

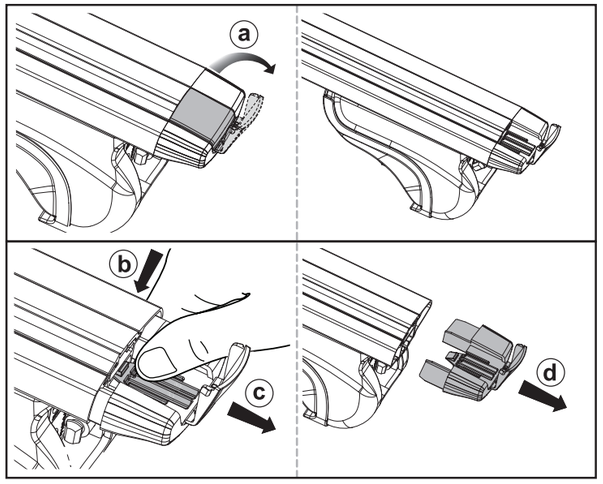

EN Appropriate for the listed vehicles **FR** Les barres de toit ne doit pas être utilisé sur des véhicules autres que spécifiés **ES** Válido para la lista adjunta de vehículos **DE** Passend für die gelisteten Fahrzeuge **IT** Appropriare per veicolo **NL** Geschikt voor voertuig **PT** Apropriado aos seguintes veículos **PL** Pasuje do samochodów **HU** Megfelelő gépjármű **RU** Подходит для автомобилей **RO** Convenabil pentru vehicul **SK** Vhodné pre vozidlo **CS** Vhodné do vozidel **SV** Produkten är endast avsedd för angivna fordon **BG** Релсите за багажник на покрива не трябва да се използват при автомобили, различни от посочените **TR** Tavan barları belirtilen araçların dışındaki araçlarda kullanılmamalıdır" **UK** Рейлінги не можна встановлювати на автомобілі, яких немає у списку **EL** Για το οχημα **DA** Egnet til køretøjer

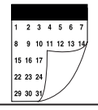

KIT

Kg

ALFA ROMEO				
156 Crosswagon (3)	5	04 ->		75
156 Sportwagon (3)	5	03/02 ->		75
156 Sportwagon (3)	5	00 -> 02/02		75
159 SW (3)	5	06 ->		50
STELVIO (3)	5	17 ->	06+	75
AUDI				
100 Avant (3)	5	91 -> 94		100
200 Avant (3)	5	83 -> 90		75
A3 SPORTBACK (8P) (3)	5	04 -> 01/13	02+	75
A3 SPORTBACK (8V) (3)	5	02/13 ->	06+	75
A4 ALLROAD (3)	5	06/16 ->		75
A4 ALLROAD (3)	5	05/09 -> 05/16		100
A4 Avant (3)	5	05/08 -> 10/15	02+	60
A4 Avant (3)	5	96 -> 07/01		75
A4 Avant (3)	5	11/15 ->	06+	75
A6 ALLROAD (3)	5	00 -> 05/06		100
A6 ALLROAD (3)	5	09/19 ->		75
A6 ALLROAD (3)	5	06/06 -> 04/12		100
A6 ALLROAD (3)	5	05/12 -> 08/19	06+	75
A6 Avant (3)	5	98 -> 02/05		100
A6 Avant (3)	5	94 -> 97		100
A6 Avant (C5) (3)	5	03/05 -> 09/11	02+	75
A6 Avant (C8) (3)	5	09/18 ->	06+	75
Q3 (3)	5	11 -> 10/18	02+	75
Q4 E-TRON (3)	5	21 ->	06+	75
Q7 (3)	5	06 -> 06/15	02+	75
BMW				
iX1 (U11 E) (3)	5	23 ->	05+	75
iX3 (G08) (3)	5	21 ->	06+	75
SERIE 2 ACTIVE TOURER (F45) (3)	5	14 -> 21	05+	75
SERIE 2 ACTIVE TOURER (U06) (3)	5	22 ->	05+	75
SERIE 2 GRAND TOURER(F46) (3)	5	15 ->	05+	75
SERIE 3 Touring (E91) (3)	5	10/05 -> 09		75
SERIE 3 Touring (F31) (3)	5	09/12 -> 08/19	05+	75
SERIE 3 Touring (G21) (3)	5	19 ->	05+	75
SERIE 5 Touring (E61) (3)	5	05/04 -> 08/10		75
SERIE 5 Touring (F11) (3)	5	09/10 -> 04/17	06+	75
SERIE 5 Touring (G31) (3)	5	05/17 ->	06+	75
X1 (E84) (3)	5	10/09 -> 09/15	02+	75
X1 (F48) (3)	5	10/15 ->	05+	75
X1 (U11) (3)	5	22 ->	05+	75
X3 (E83) (3)	5	03 -> 11/10		75
X3 (F25) (3)	5	12/10 -> 10/17	05+	75
X3 (G01) (3)	5	11/17 ->	06+	75
X5 (E53) (3)	5	00 -> 02/07		75
X5 (E70) Open Rails (3)	5	03/07 -> 10/13		100
X5 (F15) (3)	5	13 -> 18	05+	75

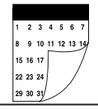

KIT

Kg

CADILLAC				
SRX (3)	5	09 ->		70
SRX (3)	5	04 -> 08		70
CHEVROLET				
CAPTIVA (3)	5	06 ->		100
TRANS SPORT (3)	5	97 ->		75
CHRYSLER				
300C TOURING (3)	5	06 ->		70
GRAND VOYAGER (3)	5	96 -> 00		70
VOYAGER (3)	5	96 -> 00		70
VOYAGER (3)	5	83 -> 95		70
CITROËN				
BERLINGO II MODUTOP (B9) (3)	5	05/08 -> 08/18		75
BERLINGO II MULTISPACE (B9) (3)	5	05/08 -> 08/18		75
BX Break (3)	5	83 -> 99		75
C3 PICASSO (3)	5	09 ->		60
C3 X-TR (3)	5	04 ->		70
C3-AIRCROSS (3)	5	17 ->		45
C4 AIRCROSS (3)	5	12 ->	04+	70
C5 Tourer (3)	5	06/08 ->		80
C5-AIRCROSS (3)	5	18 ->		75
C-CROSSER (3)	5	07/07 ->		100
DS7 CROSSBACK (3)	5	18 ->	06+	75
XM Break (3)	5	91 -> 00		100
CUPRA				
ATECA (3)	5	18 ->		75
FORMENTOR (3)	5	21 ->		75
LEON ST (3)	5	20 ->	06+	75
DACIA				
DOKKER (3)	5	12 ->		75
DOKKER (3)	4	12 ->		75
DUSTER (3)	5	11/13 -> 17	07+	75
DUSTER (3)	5	10 -> 10/13		80
DUSTER II (3)	5	18 ->	08+	75
JOGGER (3)	5	22 ->		75
LODGY (3)	5	12 ->	06+	75
LOGAN MCV / BREAK (3)	5	12/12 ->		75
SANDERO STEPWAY (3)	5	12/12 -> 11/20		75
SANDERO STEPWAY (3)	5	09 -> 11/12		80
DAEWOO				
REXTON (3)	5	02 ->		100
DAIHATSU				
TERIOS (3)	5	05/06 ->		80
DODGE				
JOURNEY (3)	5	06/08 ->		75
FIAT				
4X4 CROSS (3)	5	06 -> 12		50
500 X (3)	5	15 ->	06+	75

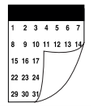

KIT

Kg

CROMA (3)	5	06/05 ->		75
DOBLO (3)		01 -> 09		75
FREEMONT (3)	5	11 ->		70
PANDA (3)	5	03/12 ->	03+	50
PANDA (3)	5	10/03 -> 02/12		50
PANDA 4X4 (3)	5	04 -> 12		50
PANDA CROSS (3)	5	14 ->		75
SEDICI (3)	5	06 ->		60
STILO Multi Wagon (3)	5	01 ->		75
TIPO CROSS (3)	5	20 ->	06+	75
TIPO STATION WAGON (3)	5	16 ->	06+	75
FORD				
AEROSTAR (3)	5	97 ->		75
FIESTA ACTIVE (3)	5	05/18 ->	06+	75
FOCUS II Station Wagon (3)	5	10/04 -> 04/11		75
FOCUS III SW (3)	5	05/11 -> 09/18	02+	75
FOCUS IV SW (3)	5	10/18 ->	06+	75
FOCUS SW ACTIVE (3)	5	19 ->	06+	75
GALAXY (3)	5	96 -> 05/06		75
GALAXY III (3)	5	10/15 ->	06+	75
GRAND C-MAX (3)	5	10/10 ->		100
KA+ ACTIVE (3)	5	18 ->		75
KUGA (3)	5	06/08 -> 10/12		75
MAVERICK (3)	5	92 -> 98		55
MAVERICK (3)	3	92 -> 98		55
MONDEO III SW (3)	5	06/07 -> 12/14		75
MONDEO IV SW (3)	5	15 ->	06+	75
MONDEO IV SW HYBRID (3)	5	05/19 ->	06+	75
TOURNEO COURRIER (3)	5	14 ->		45
HONDA				
ACCORD Tourer / Break (3)	5	03 -> 08/08		70
ACCORD Tourer / Break (3)	5	09/08 ->		75
CR-V (3)	5	96 -> 01		50
CR-V (3)	5	10/18 ->	04+	75
JAZZ CROSSTAR (3)	5	20 ->		75
ODYSSEY / SHUTTLE (3)	5	95 ->		75
HYUNDAI				
BAYON (3)	5	21 ->	06+	75
I 20 ACTIVE (3)	5	16 ->		75
I 30 SW (MK III) (3)	5	17 ->	02+	75
IX 35 (3)	5	10 -> 08/15	04+	70
IX 55 (3)	5	11/08 ->		100
KONA (3)	5	17 ->	06+	75
SANTA FE (3)	5	10 -> 08/12		75
SANTA FE (3)	5	09/12 -> 17	05+	75
TERRACAN (3)	5	02 ->		35
TRAJET (3)	5	99 ->		100
TUCSON (3)	5	04 -> 06/15		75
TUCSON II (3)	5	07/15 -> 10/20	04+	70
TUCSON IV (3)	5	21 ->	05+	75
JEEP				
CHEROKEE (3)	3	84 -> 00		75
CHEROKEE (3)	5	84 -> 00		75
CHEROKEE (KL) (3)	5	14 ->		75
CHEROKEE Liberty (3)	5	01 ->		80

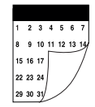

KIT

Kg

GRAND CHEROKEE (3)	5	98 -> 03/04		60
GRAND CHEROKEE (3)	5	04/04 -> 11/10		60
PATRIOT (3)	5	04/07 ->		65
KIA				
CARNIVAL (3)	5	05/06 ->		75
CARNIVAL / SEDONA (3)	5	01 -> 04/06		75
CEE D SPORTY WAGON (3)	5	07 -> 08/12		75
CEE D SW (3)	5	09/18 ->	06+	75
NIRO (3)	5	16 -> 21	06+	75
SORENTO IV (3)	5	20 ->	05+	75
SORENTO (XM) (3)	5	12/09 -> 02/15		100
SOUL (3)	5	09 -> 03/14		75
SPORTAGE I (3)	5	93 -> 08/04		75
SPORTAGE I (3)	3	93 -> 08/04		75
SPORTAGE II (3)	5	09/04 -> 10/10		75
SPORTAGE II (3)	3	09/04 -> 10/10		75
SPORTAGE III (3)	5	11/10 -> 15	04+	70
SPORTAGE IV (3)	5	16 ->	04+	70
SPORTAGE V (3)	5	22 ->	06+	75
STONIC (3)	5	17 ->		75
LAND ROVER				
DISCOVERY (3)	5	99 -> 03		75
LEXUS				
NX 300H (3)	5	15 ->	06+	75
RX 400H (3)	5	05 ->		75
RX 450H (3)	5	16 ->	06+	75
UX (3)	5	19 ->	06+	75
MAZDA				
5 (3)	5	05 -> 01/11		75
6 Fastwagon (3)	5	13 ->		75
6 Fastwagon (3)	5	03/08 -> 12		75
DEMIO (3)	5	98 ->		50
MPV (3)	5	00 -> 06		100
PREMACY (3)	5	99 ->		75
MERCEDES-BENZ				
Classe C Break (S204) (3)	5	10/07 -> 08/14		100
Classe C Break (S205) (3)	5	09/14 ->	06+	75
Classe C Break (S206) (3)	5	21 ->	06+	75
Classe E Break (S124) (3)	5	85 -> 95		100
Classe E Break (S212) (3)	5	11/09 ->		100
Classe E Break S210) (3)	5	96 -> 02		100
Classe E Break S211) (3)	5	03 -> 10/09		100
Classe M / ML (W163) (3)	5	97 -> 05/05		75
EQB (3)	5	22 ->		75
GL (3)	5	06 ->		100
GLA (X156) (3)	5	14 -> 04/20	06+	75
GLB (X247) (3)	5	20 ->		75
GLC (X253) (3)	5	15 ->	06+	75
GLK (3)	5	08 ->		100
VANEO (3)	5	01 ->		75
MG				
GS (3)	5	16 ->		50
HS (3)	5	19 ->	06+	75
ZS (3)	5	17 ->		75